GENERAL NOTES:
1. MATERIAL: **ALUMINUM, 6061-T651**
2. SPECIAL FINISH: **ANODIZE PER MIL-A-8625F, TYPE II, CLASS 2 (BLACK)**
3. SURFACE ROUGHNESS (UNLESS SPECIFIED OTHERWISE): **63 Ra** (AVERAGE MICRO-INCHES)
4. INTERPRET DIMENSIONS AND TOLERANCES PER ASME Y14.5M-1994
5. DEBURR AND BREAK ALL SHARP EDGES, MAX 0.010" (UNLESS SPECIFIED OTHERWISE)
6. PARTS ARE TO BE CLEAN AND FREE OF OIL, GREASE, AND OTHER CONTAMINANTS
7. DIMENSIONS INCLUDE ANODIZING, ELECTROPLATING, AND CHEMICALLY APPLIED FINISHES IF APPLICABLE

REVISION HISTORY				
ZONE	REV	DESCRIPTION	DATE	APPROVED
	-	INITIAL RELEASE	10/9/2014	HHMI\\arnoldj

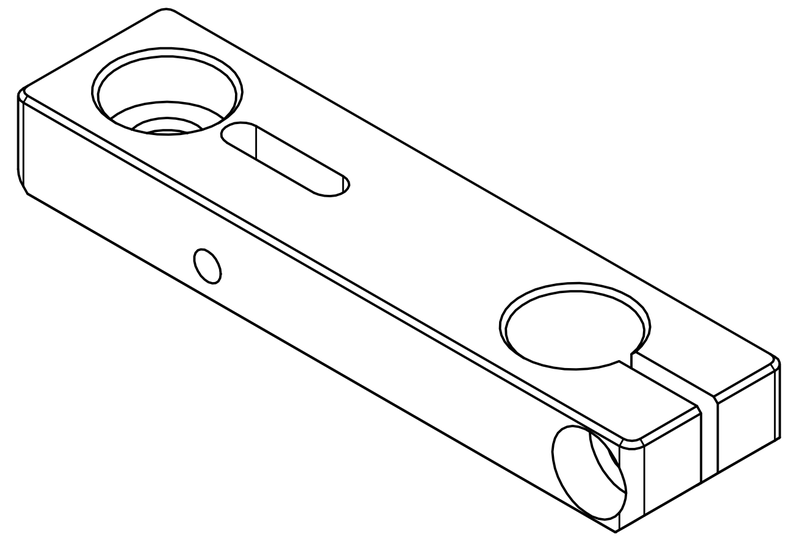

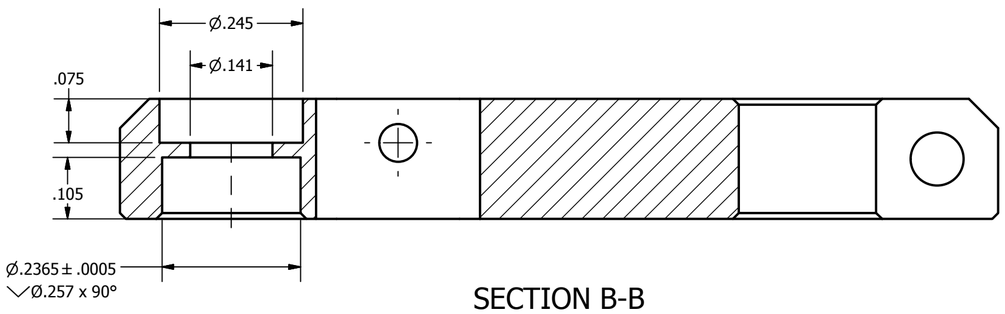

SECTION B-B

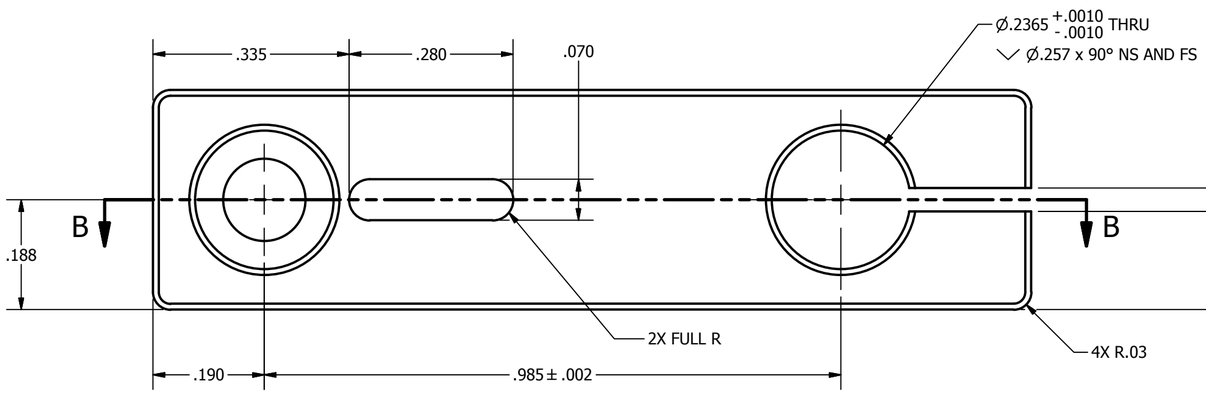

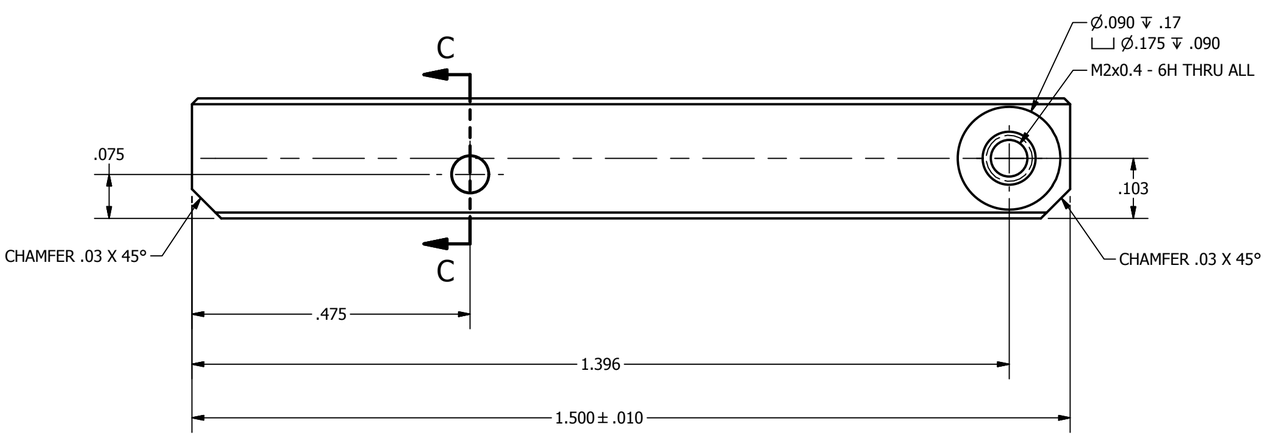

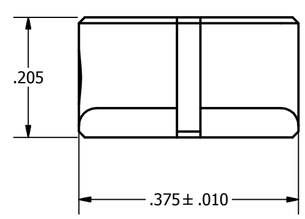

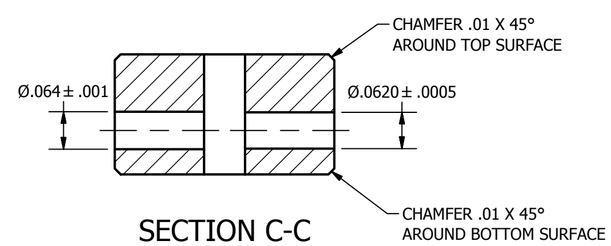

SECTION C-C

NOTICE:
INFORMATION CONTAINED IN THIS DOCUMENT OR ANY REPRODUCTION THEREOF, IS PROPRIETARY INFORMATION AND PROPERTY OF HOWARD HUGHES MEDICAL INSTITUTE. IT SHALL NOT BE DISCLOSED, COPIED, DUPLICATED OR USED FOR MANUFACTURE, PRODUCTION OR PROCUREMENT, WITHOUT THE EXPRESS WRITTEN PERMISSION OF HOWARD HUGHES MEDICAL INSTITUTE.

(UNLESS SPECIFIED OTHERWISE)
PRIMARY UNITS: INCHES
[SECONDARY UNITS]: MILLIMETERS

PRIMARY TOLERANCES:	
X.X	± 0.020
X.XX	± 0.010
X.XXX	± 0.005
X.XXXX	± 0.0005
ANGULAR	± 0.5 DEG

- DO NOT SCALE DRAWING -

THIRD ANGLE PROJECTION:

HHMI
HOWARD HUGHES MEDICAL INSTITUTE

HHMI janelia farm research campus

MPS Spring Mount.ipt

SIZE	PART NUMBER	REV	SHEET
C	J002886	-	1 OF 1